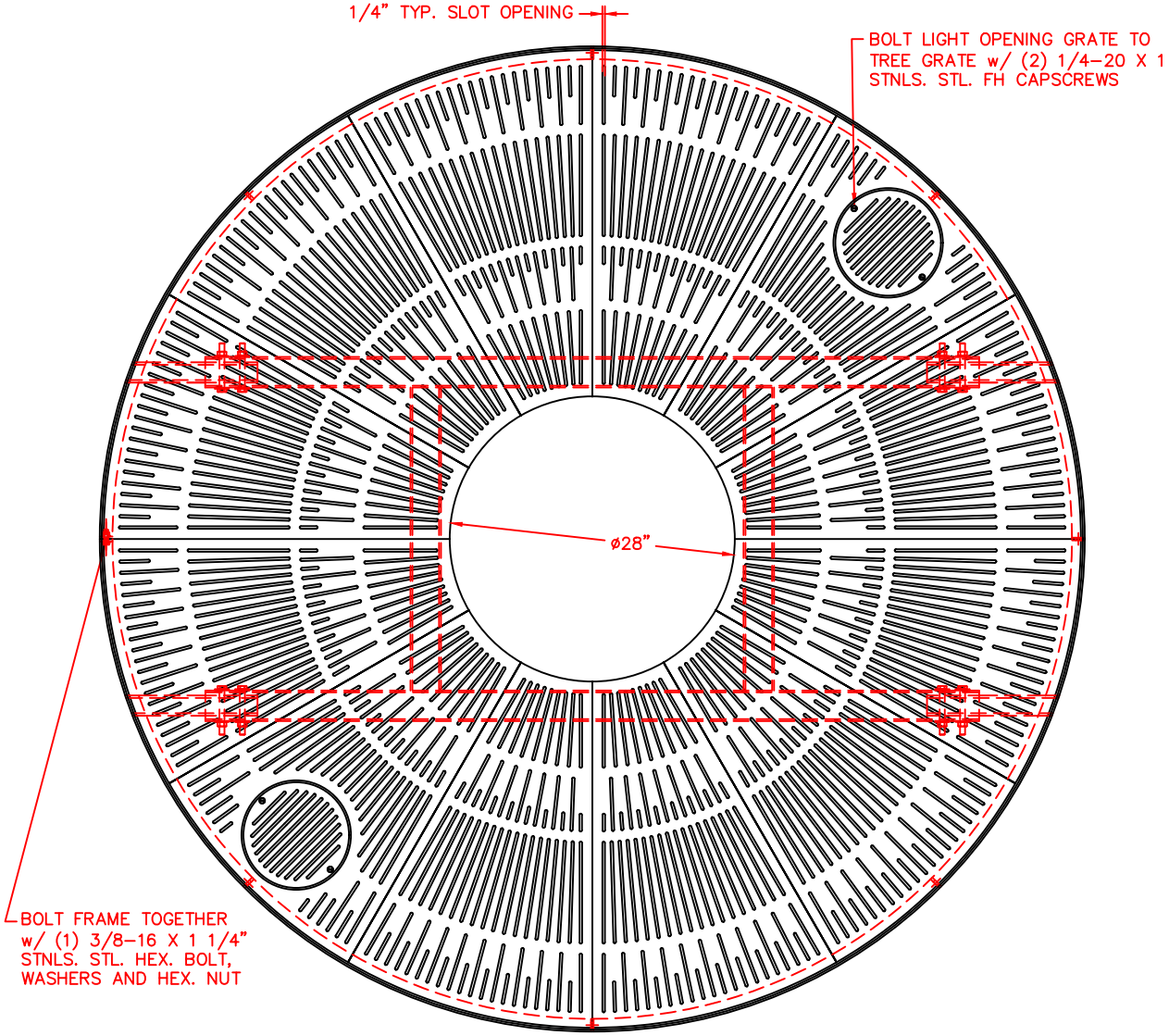

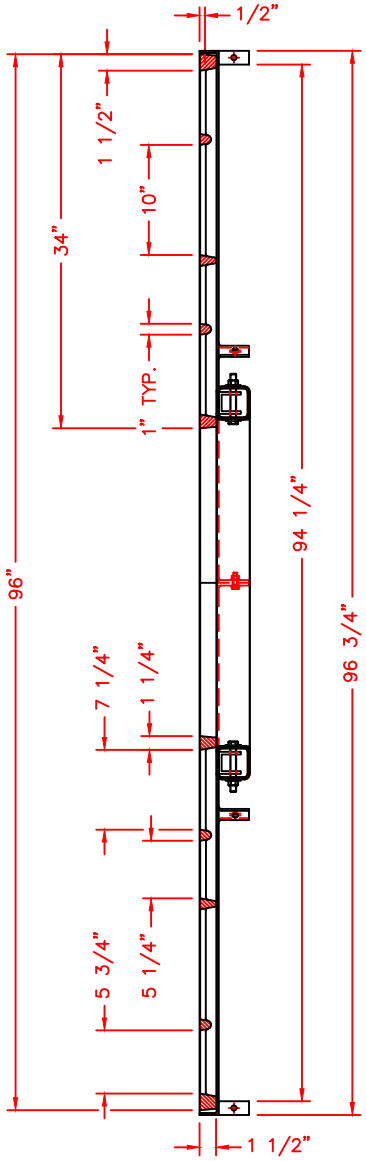

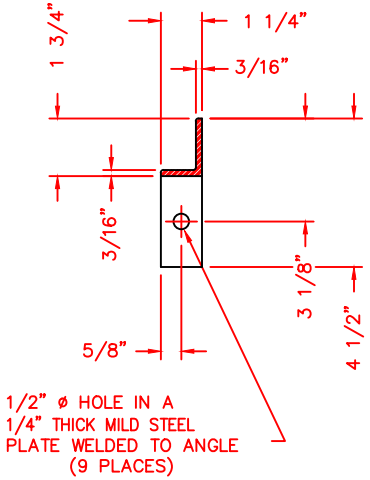

SECTION VIEW
(SCALE 1/4" = 1")

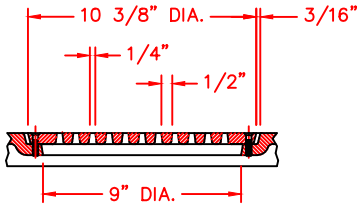

LIGHT OPENING DETAIL
QUARTER SCALE

LIGHT GRATE COMPONENT NO. 8718-0004

COMPONENT NO'S: TREE GRATE (10) 8883-0001, (2) 8883-0002,
LIGHT OPENING GRATE (2) 8718-0004, FRAME (1) 9992-0970
MATERIAL: TREE GRATE – CAST GRAY IRON ASTM A48, CLASS 35B
FRAME – A36 HOT ROLLED MILD STEEL
FINISH: NO PAINT STD., OR PER SPECS. ON CUSTOMER PURCHASE ORDER
WEIGHT: TREE GRATE – 978#/SET, FRAME – 80#

CAD DWG. REF: 8833 105-3.DWG-3

3	04-17-2013	CHANGED THE FRAME MATERIALS	CAG
2	11-24-2010	ADDED THE FRAME	ELN
1	DATE	REVISION	INT

DR. CSM	SCALE 1"=1'-0"	TITLE: R-8883 TREE GRATE w/ LIGHT OPENINGS AND FRAME	
CH.			
APP.	DIM CHK.	NEENAH FOUNDRY COMPANY NEENAH WISCONSIN 54956	NF- 8883 105-3 B
DATE 08-07-2007			