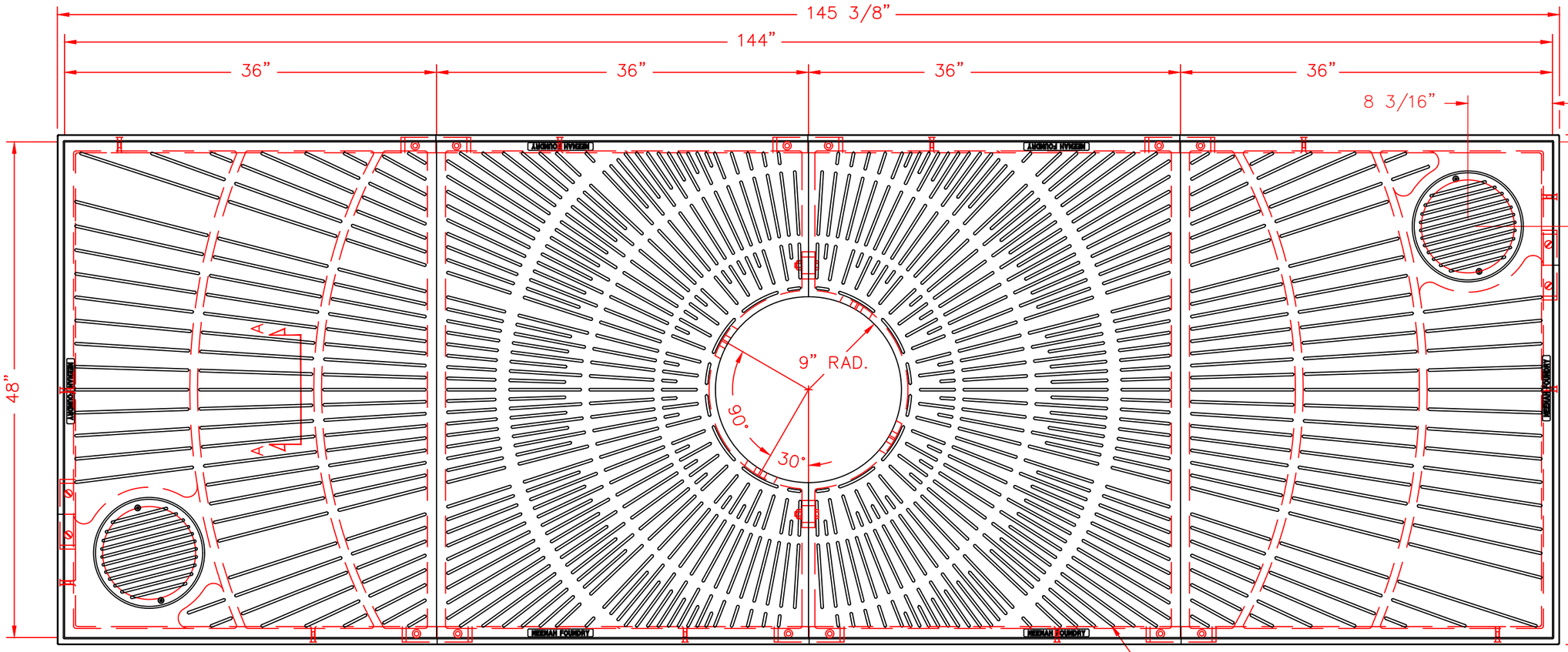

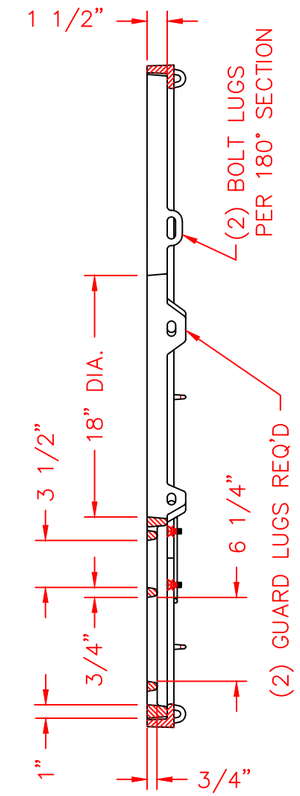

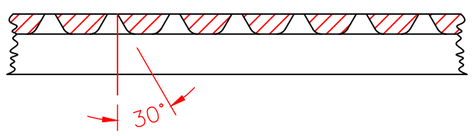

SECTION A–A
SCALE 1:4

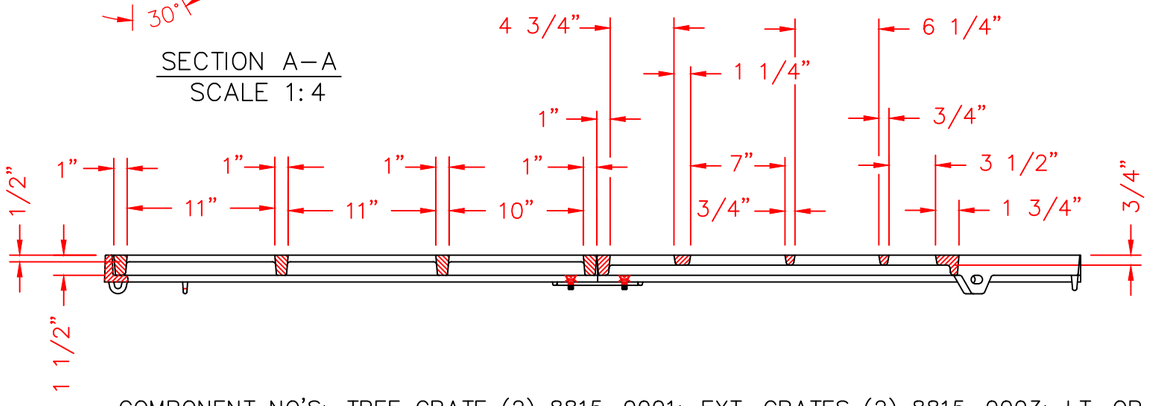

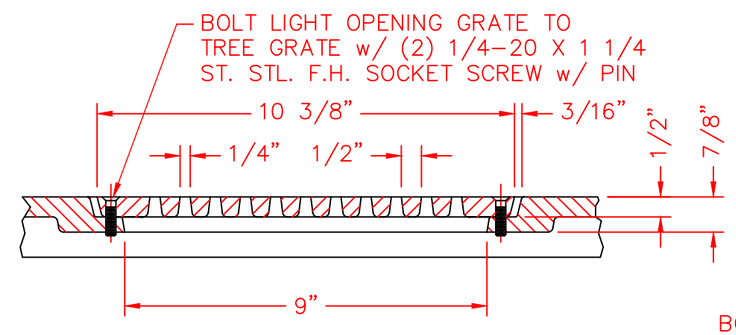

LIGHT OPENING DETAIL
SCALE 1:4

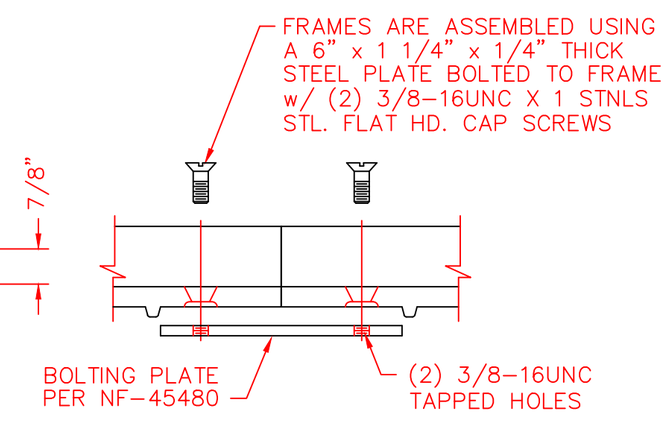

FRAME ASSEMBLY DETAIL

COMPONENT NO'S: TREE GRATE (2) 8815–0001; EXT. GRATES (2) 8815–0003; LT. OP. GRATE (2) 8718–0004
FRAME (2) PCS. 8500–7272; (2) PCS. 8500–4872; (4) PCS. 8500–3600

MATERIAL: CAST GRAY IRON ASTM A–48, CLASS 35B

FINISH: NOT PAINTED

WEIGHT: 1,180#/SET

1	10–03–2005	CORRECTED SECTION VIEW THRU EXT. GRATE	ELR
#	DATE	REVISION	INT

DR. MAG	SCALE 1"=1'–0"	TITLE: R–8815 TREE GRATE AND FRAME 4'–0" X 12'–0" w/ 18" TREE OPENING	
CH.			
APP.	DIM CHK.	NEENAH FOUNDRY COMPANY NEENAH WISCONSIN 54956	NF- 8815 120 B
DATE 08–31–2005			

CAD DWG. REF: 8815120.DWG– 2