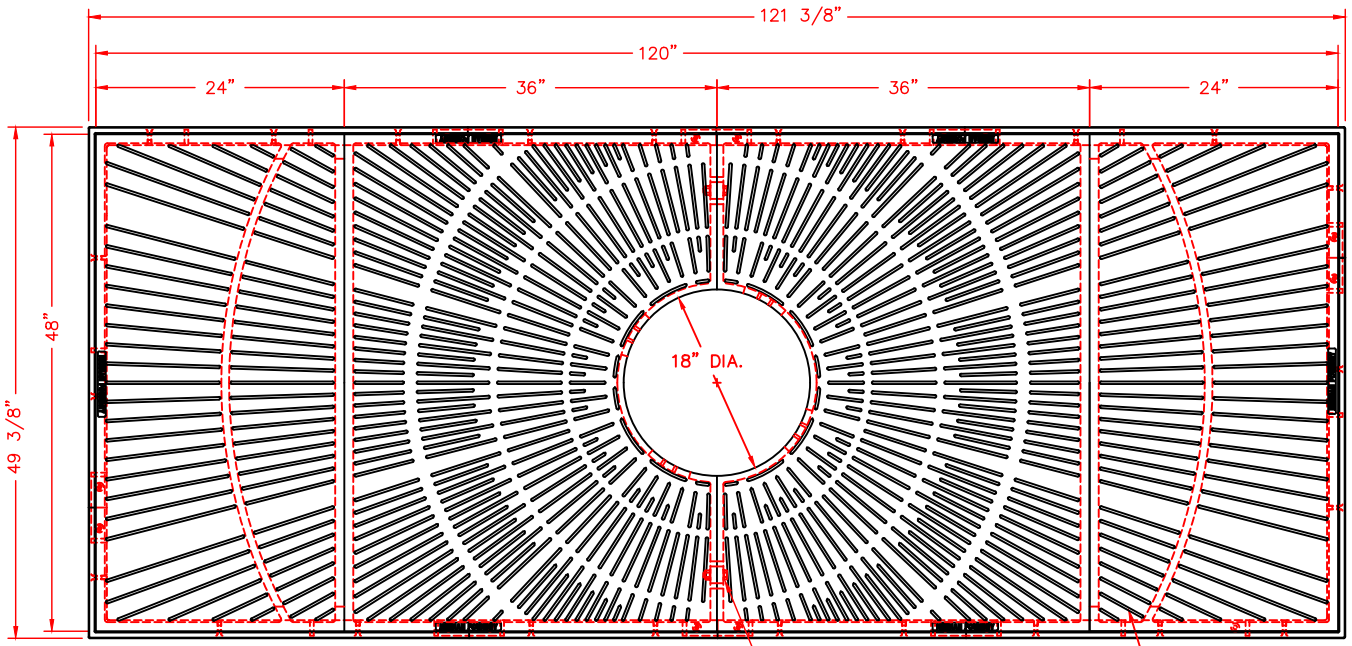

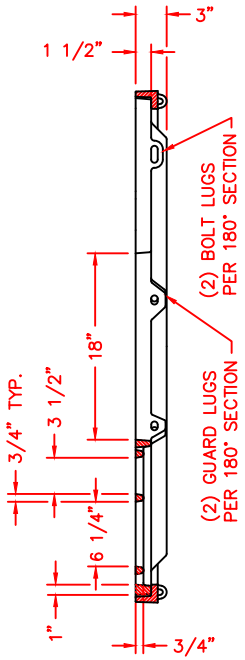

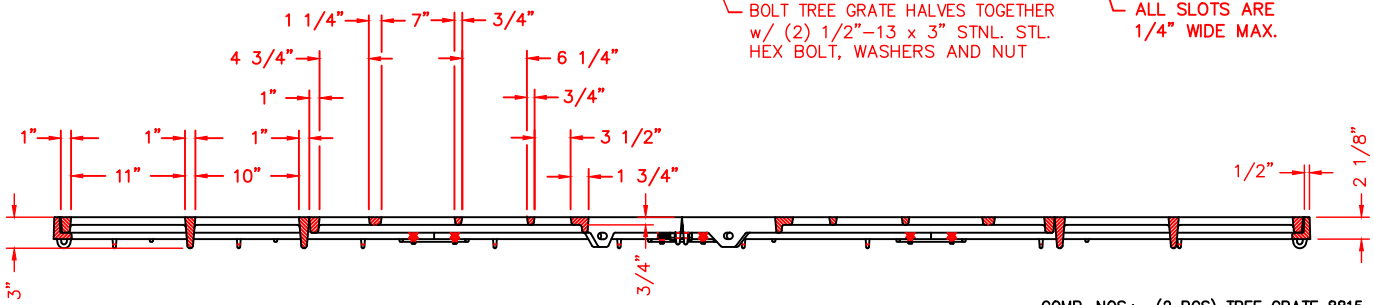

COMP. NOS.: (2 PCS) TREE GRATE 8815-0001, (2 PCS) TREE GRATE EXT. PC. 8815-0009,
(2 PCS) FRAME 8500-7272, (2 PCS) FRAME 8500-4872, (4 PCS) FRAME 8500-2400

MATERIAL: TREE GRATES AND FRAMES - CAST GRAY IRON ASTM A-48, CLASS 35B

FINISH: NOT PAINTED, UNLESS SPECIFIED ON PURCHASE ORDER

WEIGHT: TREE GRATE 898#/SET, FRAME 176#/SET

DR. E. REMME	SCALE 1"=1'-0"	TITLE: R-8815-B4 4 FT. X 10 FT. TREE GRATE AND FRAME	
CH.			
APP.	DIM CHK.	NEENAH FOUNDRY COMPANY NEENAH WISCONSIN 54956	NF- 8815 500 B
DATE 05-29-2008			

CAD DWG. REF: 8815 500.DWG-1