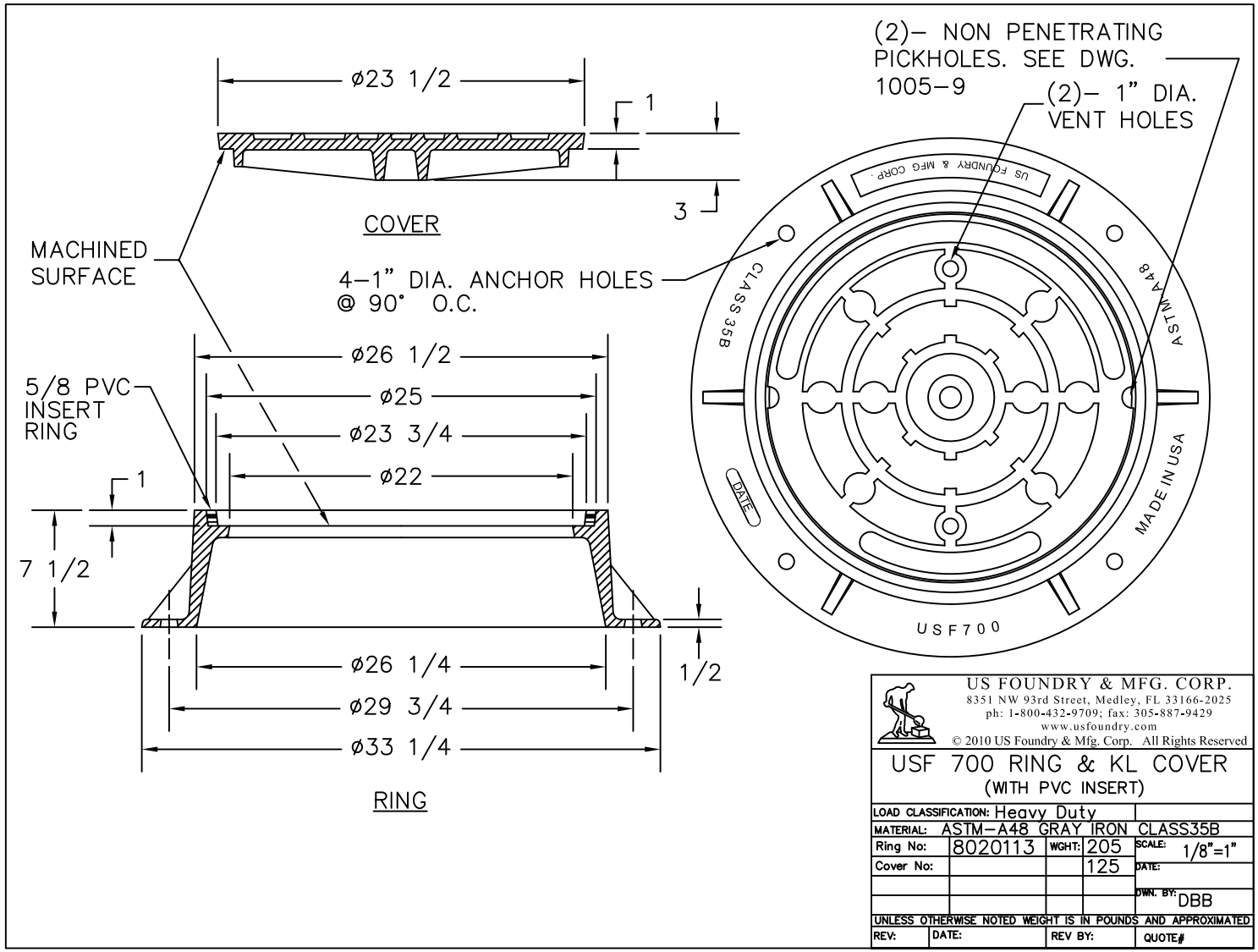
ø23 1/2
1
3
COVER
MACHINED SURFACE
4–1" DIA. ANCHOR HOLES @ 90° O.C.
ø26 1/2
ø25
ø23 3/4
ø22
5/8 PVC INSERT RING
1
7 1/2
1/2
ø26 1/4
ø29 3/4
ø33 1/4
RING
(2)– NON PENETRATING PICKHOLES. SEE DWG. 1005–9
(2)– 1" DIA. VENT HOLES
US FOUNDRY & MFG CORP.
CLASS 35B
ASTM A48
DATE
MADE IN USA
USF700
US FOUNDRY & MFG. CORP.
8351 NW 93rd Street, Medley, FL 33166-2025
ph: 1-800-432-9709; fax: 305-887-9429
www.usfoundry.com
© 2010 US Foundry & Mfg. Corp. All Rights Reserved
USF 700 RING & KL COVER
(WITH PVC INSERT)
LOAD CLASSIFICATION: Heavy Duty
MATERIAL: ASTM–A48 GRAY IRON CLASS35B
Ring No: 8020113 WGHT: 205
Cover No: 125
SCALE: 1/8"=1"
DATE:
DWN. BY: DBB
UNLESS OTHERWISE NOTED WEIGHT IS IN POUNDS AND APPROXIMATED
REV: DATE: REV BY: QUOTE#