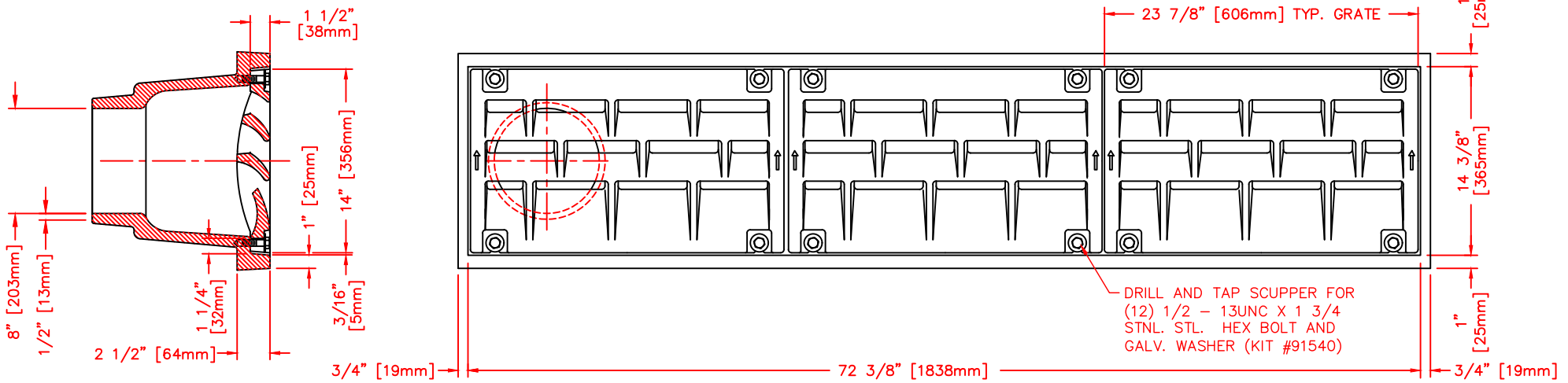

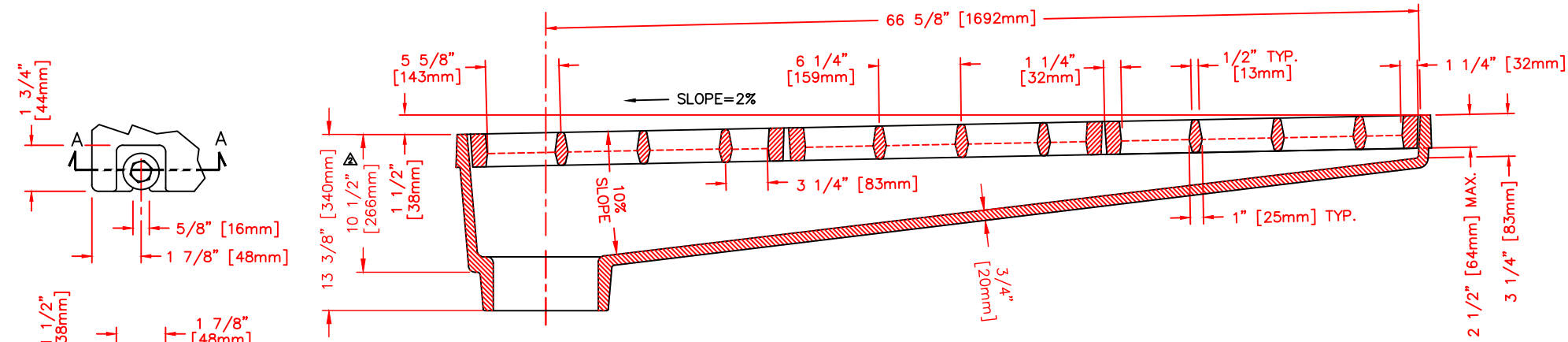

SECTION A–A
DETAIL OF BOLT SLOT

NOTE: ALL DIMENSIONS SHOWN ARE IN ENGLISH AND [METRIC]
COMPONENT NOS.: SCUPPER 3945–0002, (3) GRATES 4999–3147
MATERIAL: CAST GRAY IRON ASTM A–48, CLASS 35B
FINISH: NO PAINT
WEIGHT: SCUPPER APPROX. 430#, GRATE 82#(PER GRATE)

2	10–24–2010	ADD DIMENSION PER PATTERN CHECK	CSM
1	05–11–2010	CHANGED THE BOLT SIZE FROM 3/8	ELN
	DATE	REVISION	INT

DR.	LMA	SCALE 1/8"=1"	TITLE: R–3945–A GRATE AND SCUPPER
CH.			
APP.		DIM CHK.	NEENAH FOUNDRY COMPANY, NEENAH WISCONSIN 54956 — NF- 3945 200 B
DATE	01–26–2006		

CAD DWG. REF: 3945200.DWG– 4