U.S. PATENT NO. 7,216,459

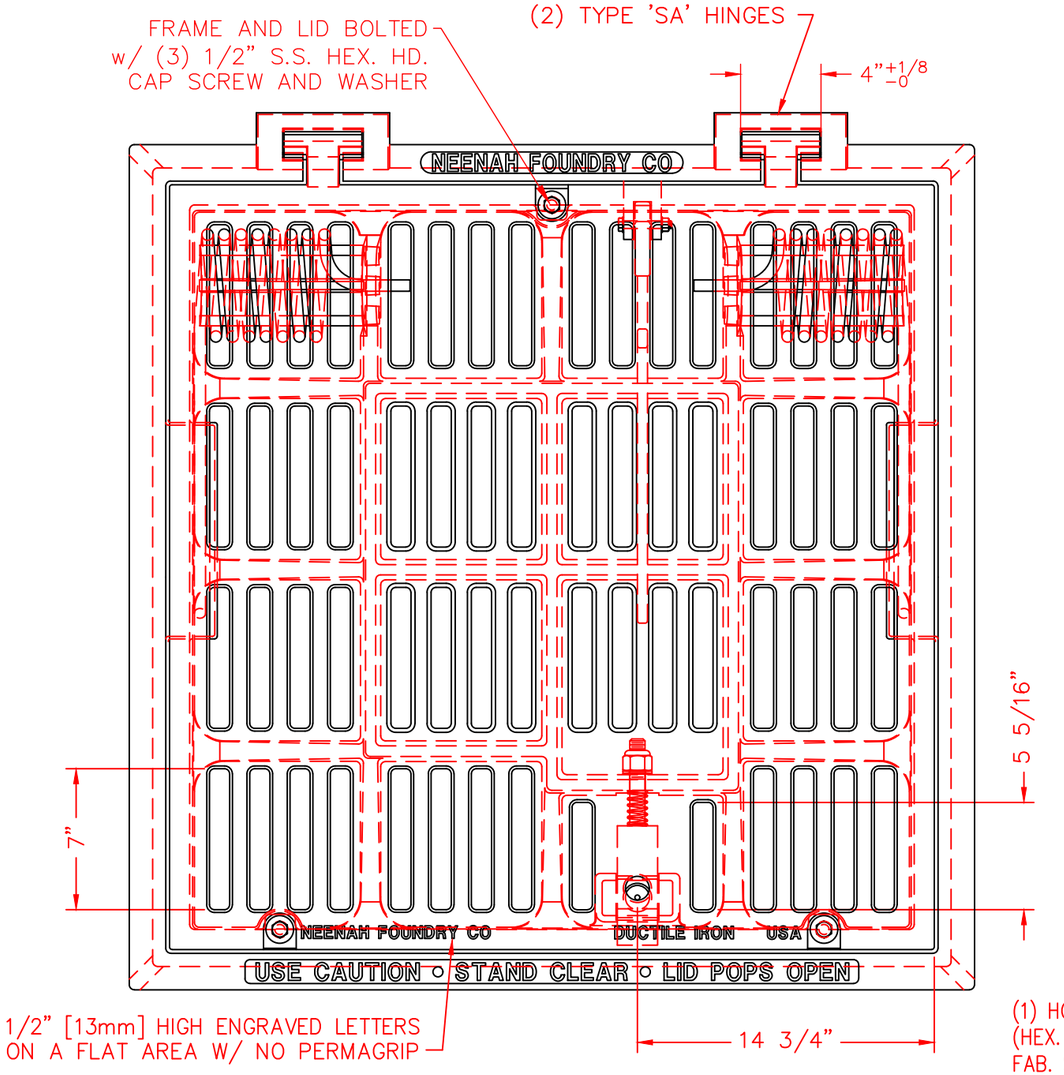

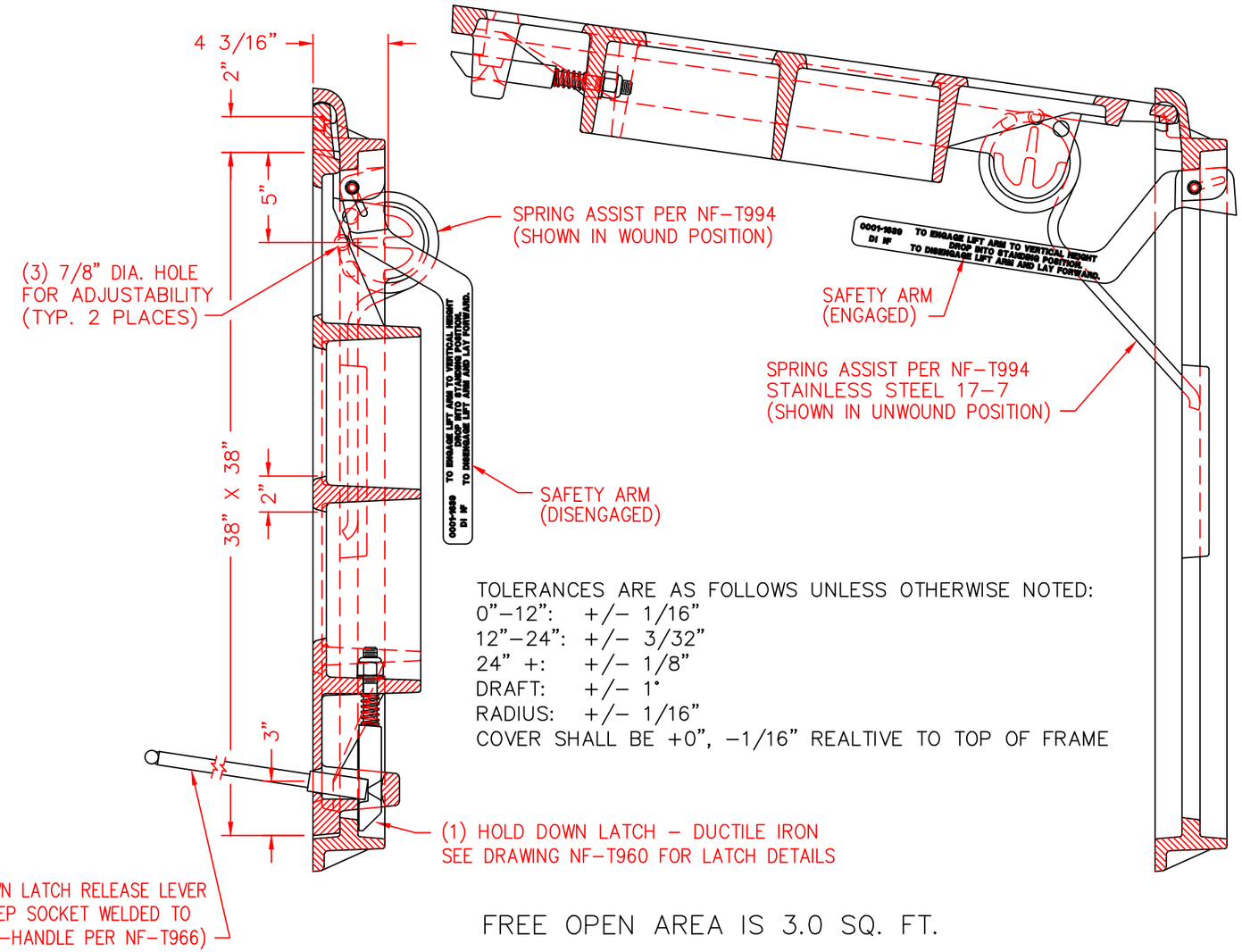

TOLERANCES ARE AS FOLLOWS UNLESS OTHERWISE NOTED:

0"-12":	+/- 1/16"
12"-24":	+/- 3/32"
24" +:	+/- 1/8"
DRAFT:	+/- 1°
RADIUS:	+/- 1/16"

COVER SHALL BE +0", -1/16" REALTIVE TO TOP OF FRAME

FREE OPEN AREA IS 3.0 SQ. FT.

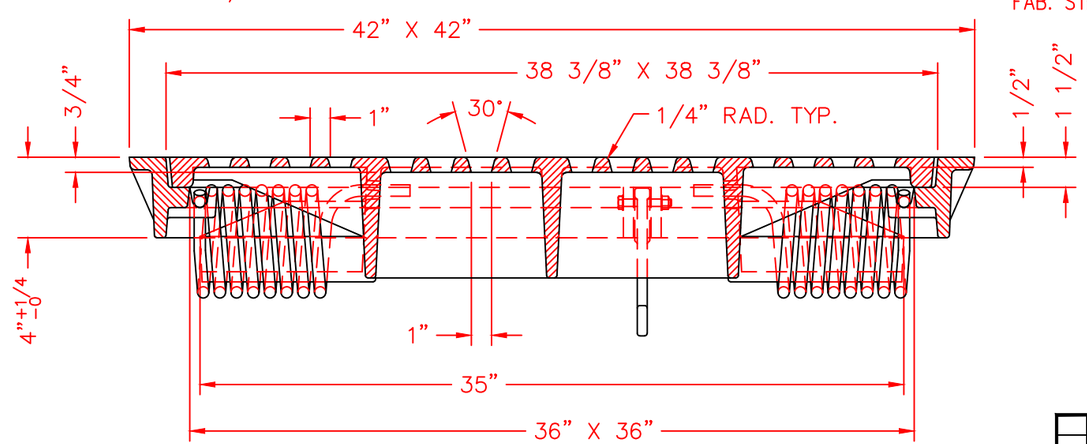

KITS INCLUDED IN THIS UNIT

1 X 81710 - SAFETY ARM
1 X 81990 - LATCH KIT
3 X 91570 - BOLTING KIT
1 X 81981 - SPRINGS KIT

NOTE: CONFORMS TO MINIMUM 100,000-POUND LOADS PER FAA ADVISORY CIRCULAR AC 150/5320-6D APPENDIX 3 ITEM 2.D.(1).
(ACTUAL PROOF LOAD IS 200,000-POUND ON A 9" X 9" CONTACT AREA.)
MEETS FASTENING REQUIREMENT PER FAA ADVISORY CIRCULAR AC 150/5370-10A

COMPONENT NO.'S: FRAME 3498-2336, GRATE 3498-3236
MATERIAL: FRAME - CAST GRAY IRON ASTM A-48, CLASS 35B
GRATE - CAST DUCTILE IRON ASTM A536, 55 + KSI.
FINISH: NO PAINT PER FAA ADVISORY CIRCULAR AC 150/5370-10A
WEIGHT: FRAME 207#, GRATE APPROX. 415#
SPRING ASSIST ASSEMBLY APPROX. 54#

1	09-17-2018	ADDED TOLERANCES	HSH	RKB	JJF
DATE		REVISION	DR	CH	APP

DR.	HSH	SCALE 1/8"=1"	TITLE: R-3498-R2GS FRAME & D.I. GRATE WITH SPRING ASSIST AND 'SA' HINGES
CH.	ELN		
APP.	SPT	DIM CHK.	NEENAH FOUNDRY COMPANY NEENAH WISCONSIN 54956 — NF- 3498 774 B
DATE	03-06-2018		

CAD DWG. REF: 3498 774.DWG- 1