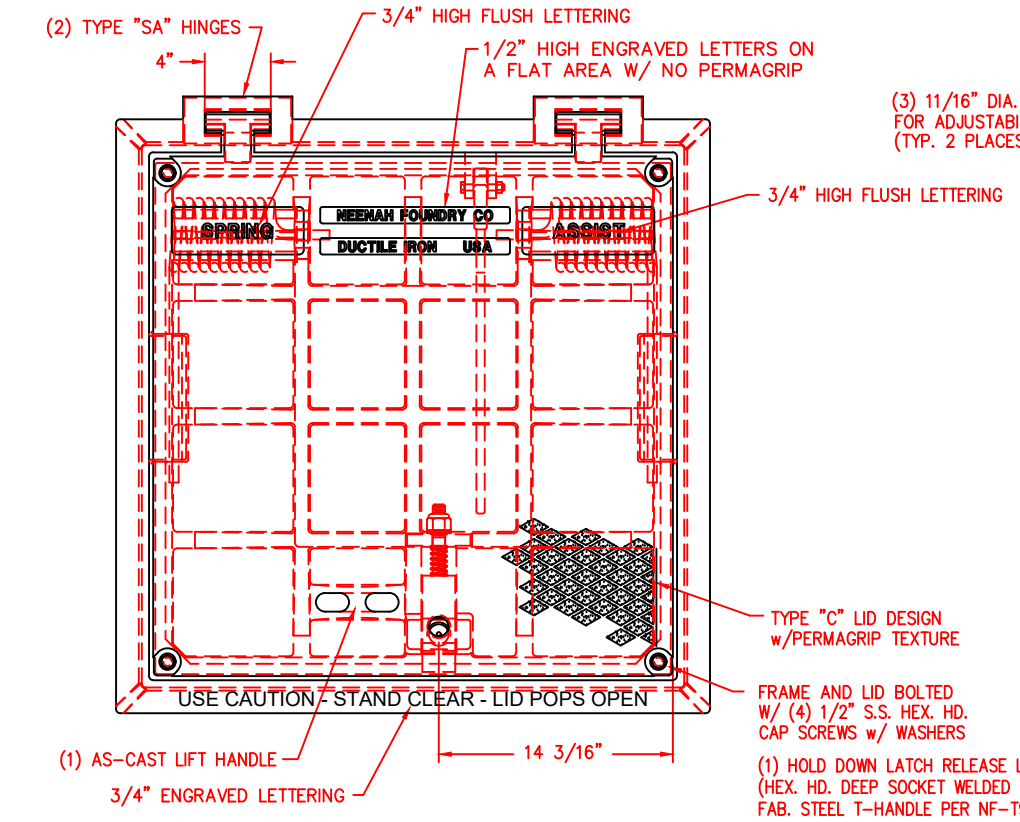

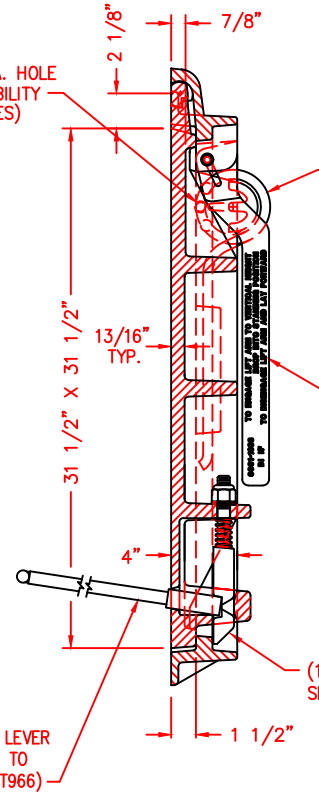

U.S. PATENT NO. 7,216,459

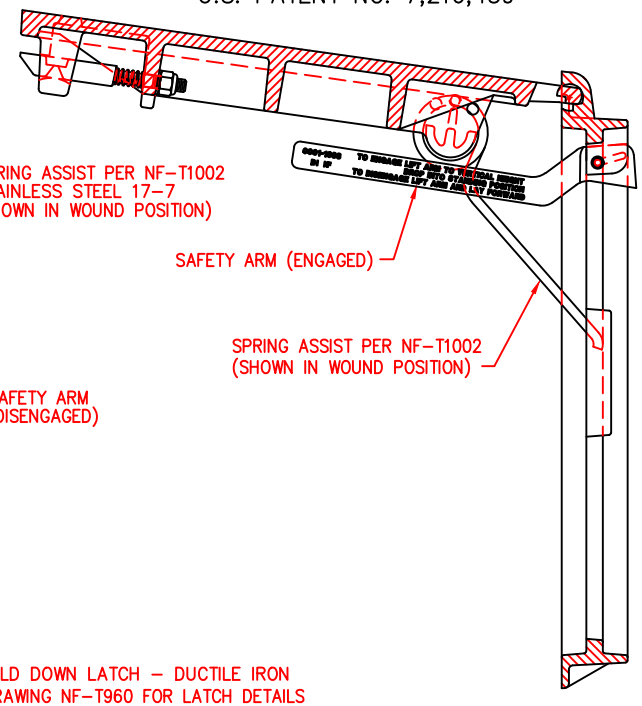

KITS INCLUDED IN THIS UNIT

1 X 81706 - SAFETY ARM
1 X 81990 - LATCH KIT
4 X 91570 - BOLTING KIT
1 X 81985 - SPRINGS KIT

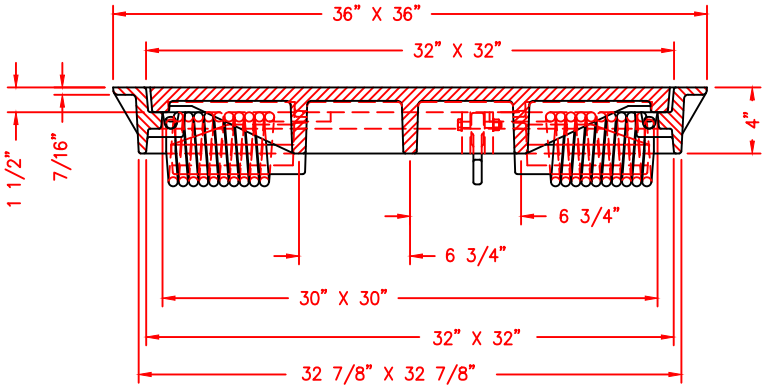

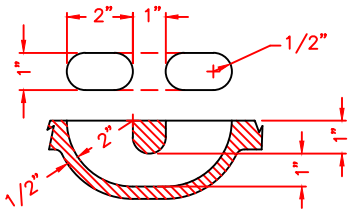

LIFT HANDLE DETAIL
QUARTER SCALE

NOTE: - CONFORMS TO MINIMUM 100,000-POUND LOADS PER FAA ADVISORY CIRCULAR AC 150/5320-6D APPENDIX 3 ITEM 2.D.(1).
(ACTUAL PROOF LOAD IS 200,000-POUND ON A 9" X 9" CONTACT AREA.)

MEETS FASTENING REQUIREMENT PER FAA ADVISORY CIRCULAR AC 150/5370-10A
COMPONENT NO'S: FRAME 3498-2230, LID 3498-0514
MATERIAL: FRAME - CAST GRAY IRON ASTM A-48, CLASS 35B
LID - CAST DUCTILE IRON ASTM A536, 55 + KSI.
FINISH: NO PAINT PER FAA ADVISORY CIRCULAR AC 150/5370-10A
WEIGHT: FRAME 146#, LID 358#, SPRING ASSIST ASSEMBLY 35#

DR. E. NIVER	SCALE 1/8"=1"	TITLE: R-3498-P2S BOLTED FRAME AND D.I. LID WITH SPRING ASSIST AND 'SA' HINGES	
CH. RKB			
APP. SPT	NEENAH FOUNDRY NEENAH WISCONSIN 54956 PHONE 800-558-5075 LINCOLN, NEBRASKA 68529 PHONE 800-234-7466	NF-3498 520	B
DATE 02-17-2017			
www.nfco.com			

CAD DWG. REF: 3498 520.DWG- 1