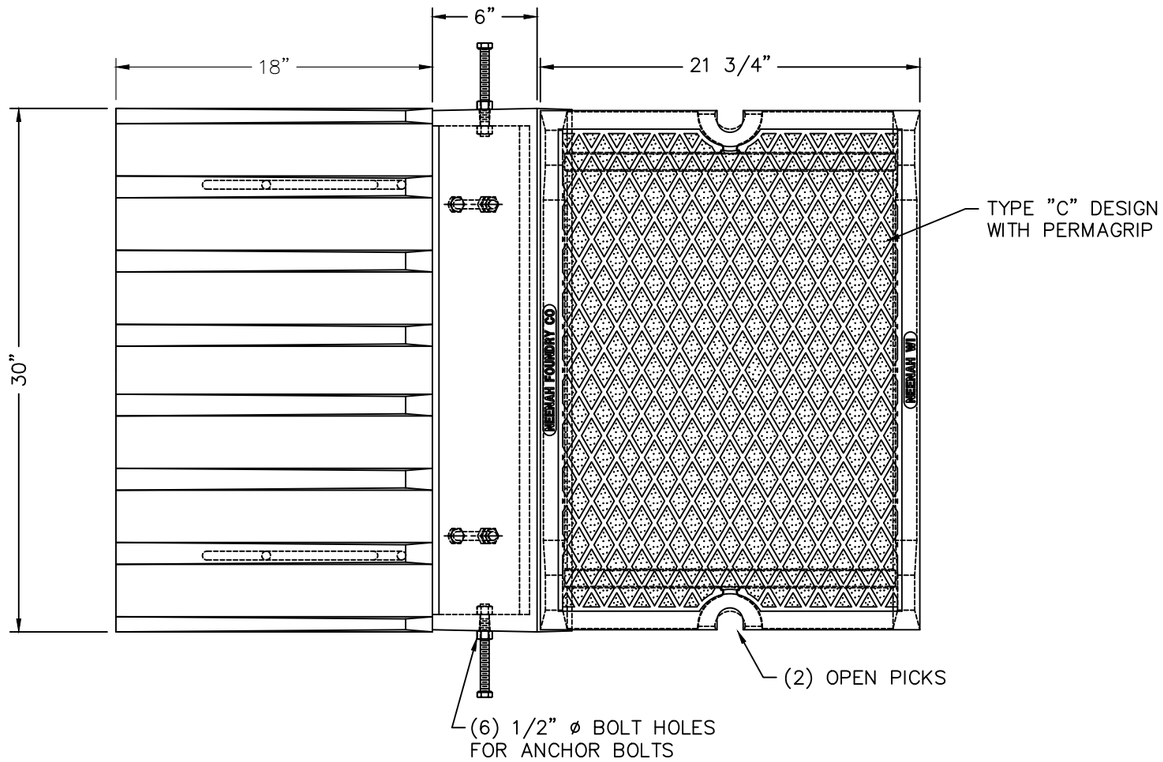

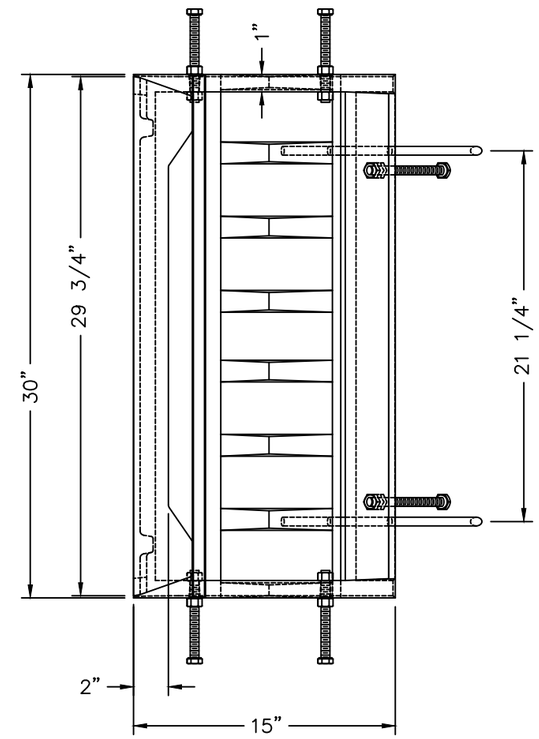

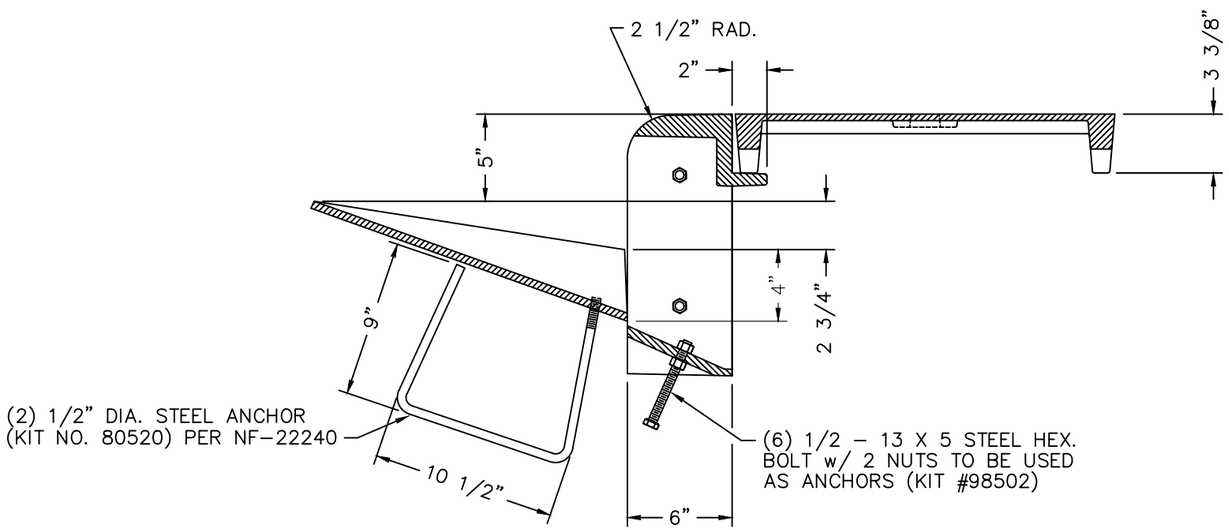

COMPONENT NO'S: CURB PLATE 3335-0001
LID 3335-0002
CURB BOX 3335-0003

MATERIAL: CAST GRAY IRON ASTM A-48, CLASS 35B

FINISH: NO PAINT

WEIGHT: CURB PLATE 135#, LID 95#, CURB BOX 140#

WAS NF-9764

11-17-2008	ADDED ANCHOR BOLTS TO DRAWING & NOTES	ELR	
DATE	REVISION	INT	

DR. E. REMME	SCALE 1 : 8	TITLE: R-3335-1 CURB PLATE, LID, AND CURB BOX	
CH.			
APP.	DIM CHK.	NEENAH FOUNDRY COMPANY NEENAH WISCONSIN 54956	NF- 3335 400 B
DATE 01-13-2006			

CAD DWG. REF: 3335 400.DWG- 2