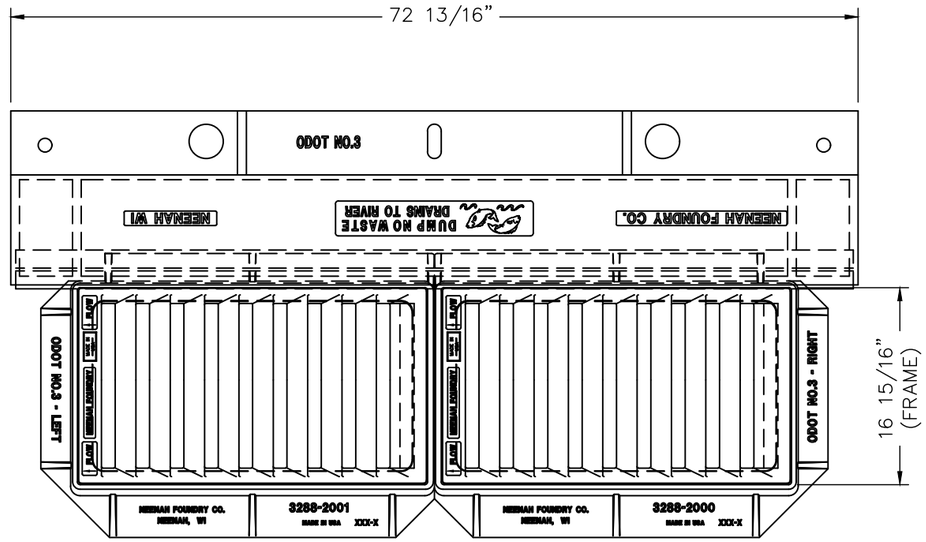

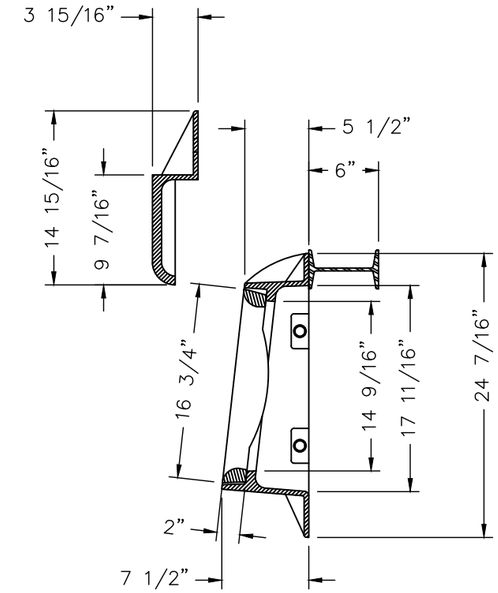

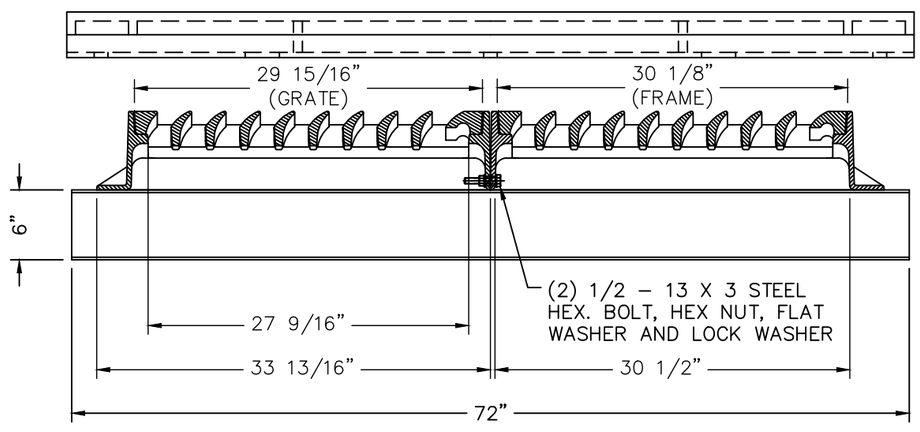

FREE OPEN AREA: 2.8 SQ. FT.
COMPONENT NOS.: FRAME W/O LEFT FLANGE 3288–2000;
FRAME W/O RIGHT FLANGE 3288–2001;
GRATE (2) PCS. 3288–3000;
CURB PLATE 3288–7001;
SUPPORT BAR 9992–0023
MATERIAL: FRAMES, GRATES, CURB PLATE – CAST GRAY IRON ASTM A–48, CLASS 35B
SUPPORT BAR – STEEL I–BEAM, 6 X 12.5 X 72 IN.
FINISH: NO PAINT
WEIGHT: FRAME 126 LBS./EA., GRATE 103 LBS./EA., CURB PLATE 238 LBS.,
SUPPORT BAR 75 LBS.

DR. E. NIVER	SCALE 1"=1'-0"	TITLE: R–3288–E2 DOUBLE INLET FRAME, TYPE 'V' GRATE, CURB PLATE AND SUPPORT BAR	
CH.			
APP.	DIM CHK.	NEENAH FOUNDRY COMPANY NEENAH WISCONSIN 54956	NF- 3288 213 B
DATE 10–14–2010			

CAD DWG. REF: 3288 213.DWG– 1