REVISED 9/14/00 KRH
1 ADDED FISH LOGO TO CURB TOP

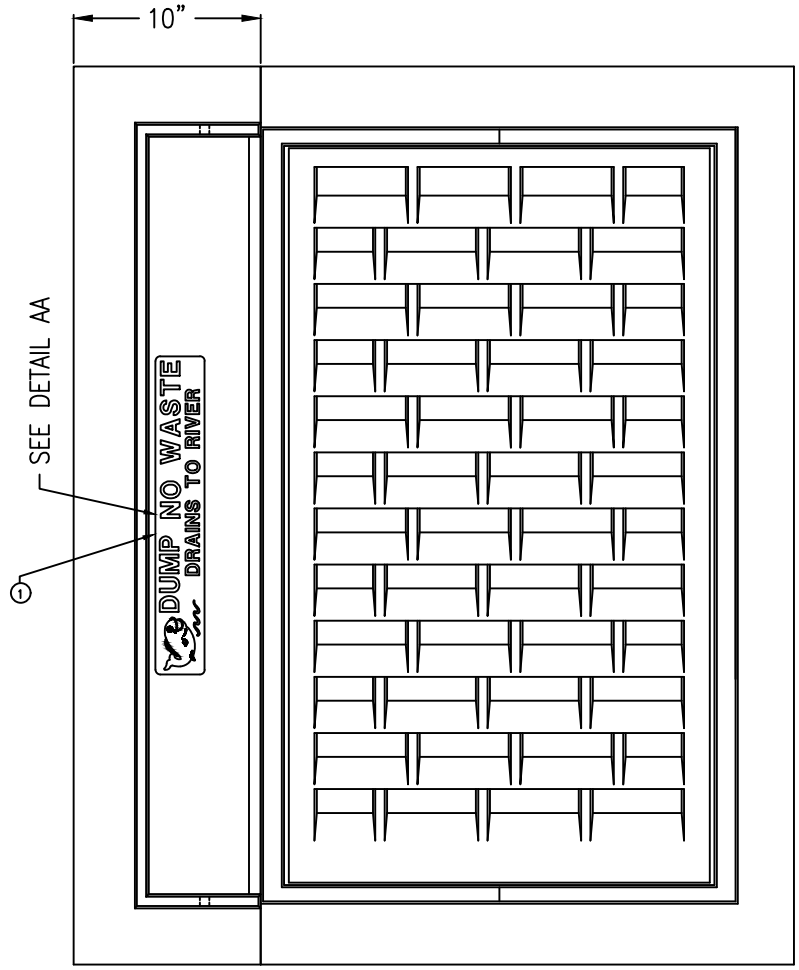

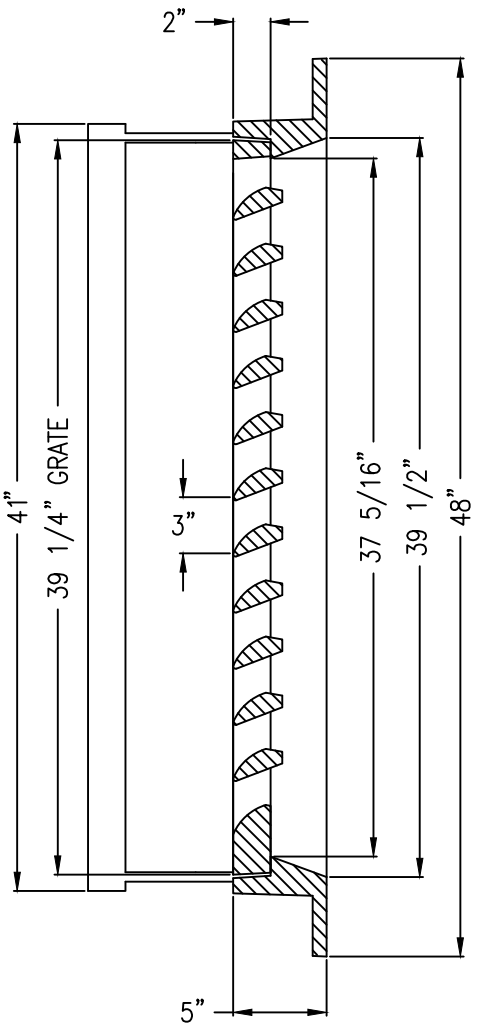

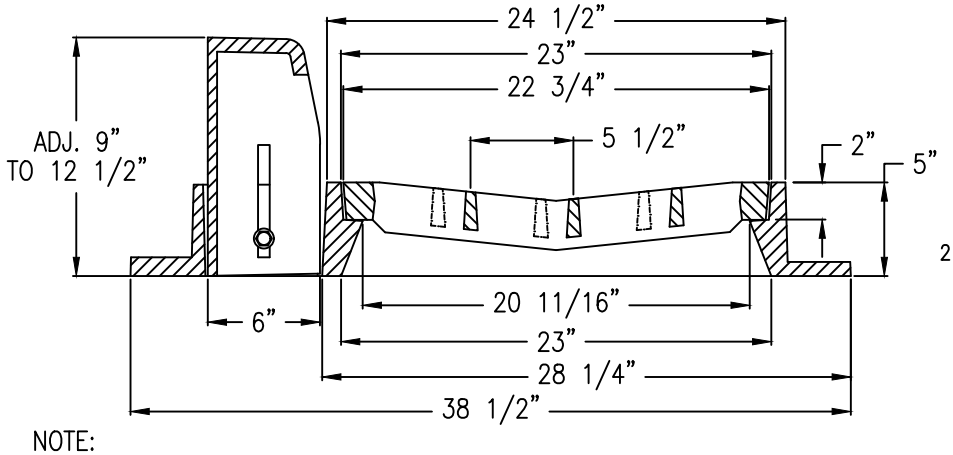

DETAIL "AA"

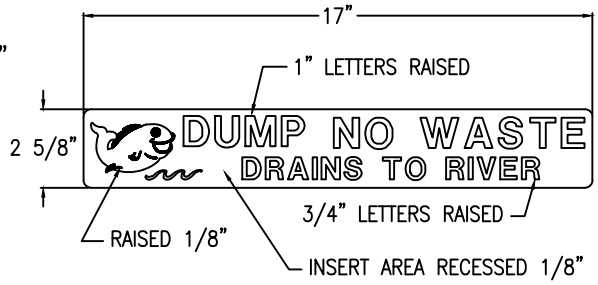

NOTE:
1. TOTAL OPEN AREA IS 310 SQUARE INCHES.

CAD DWG. REF: 2502L-05\LAYER: ALL\SCALE: .09375

MATERIAL:	CAST GRAY IRON ASTM A-48, CLASS 35B
FINISH:	NO PAINT
WEIGHT:	FRAME 265 LBS. PARTIAL FRAME 80 LBS. CURB 155 LBS. "L" GRATE 250 LBS.

Deeter Foundry, Inc.
5945 NORTH 70th STREET
LINCOLN, NEBRASKA 68529

2502L CURB INLET – FRAME, "L" GRATE, CURB & PARTIAL FRAME

Date: 27 JAN 95	Drawn by: RON	Scale: 3/32
DRAWING NO. 2502L-05	Revised by: KRH	Date: 1 OCT 09