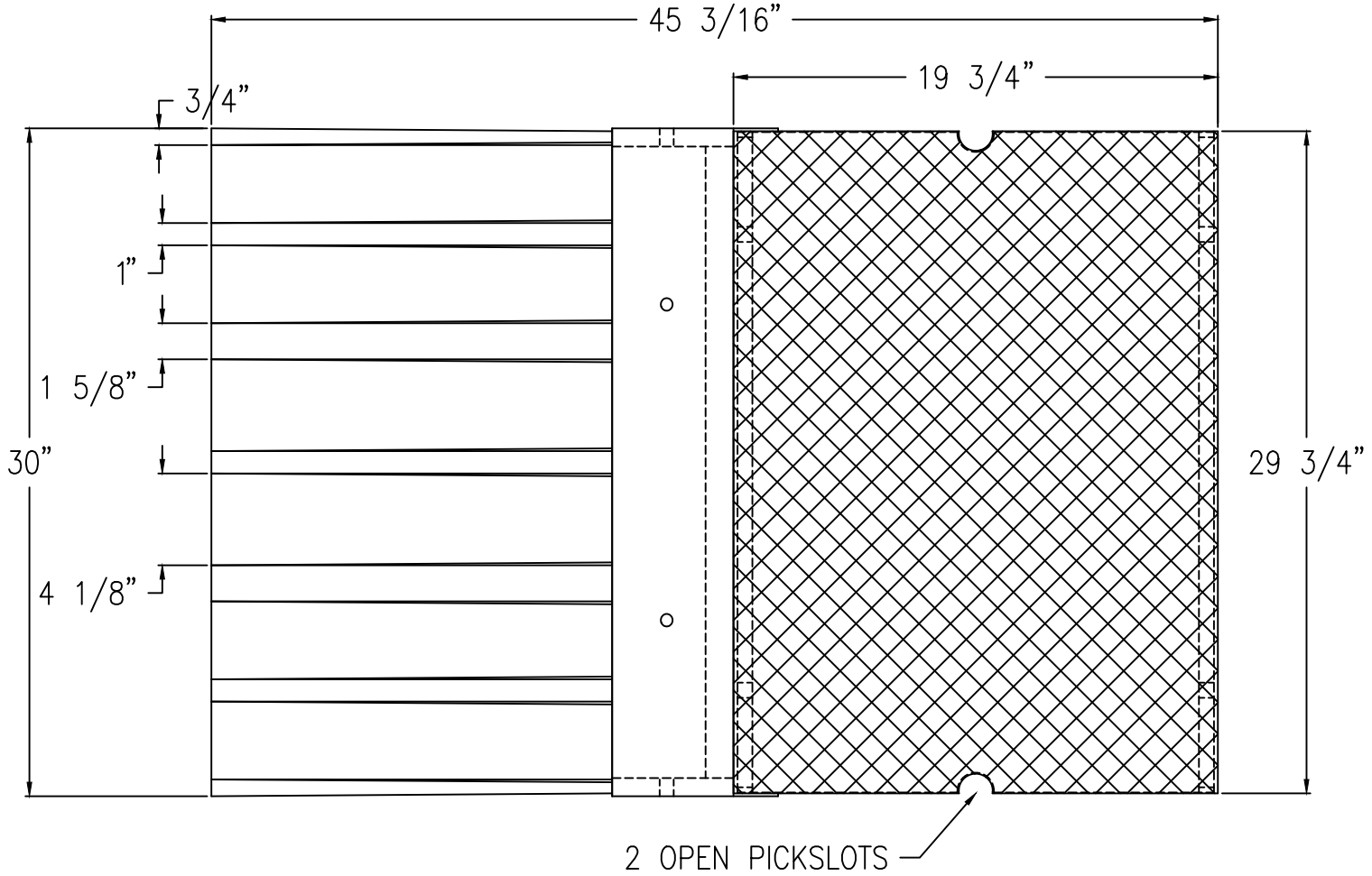

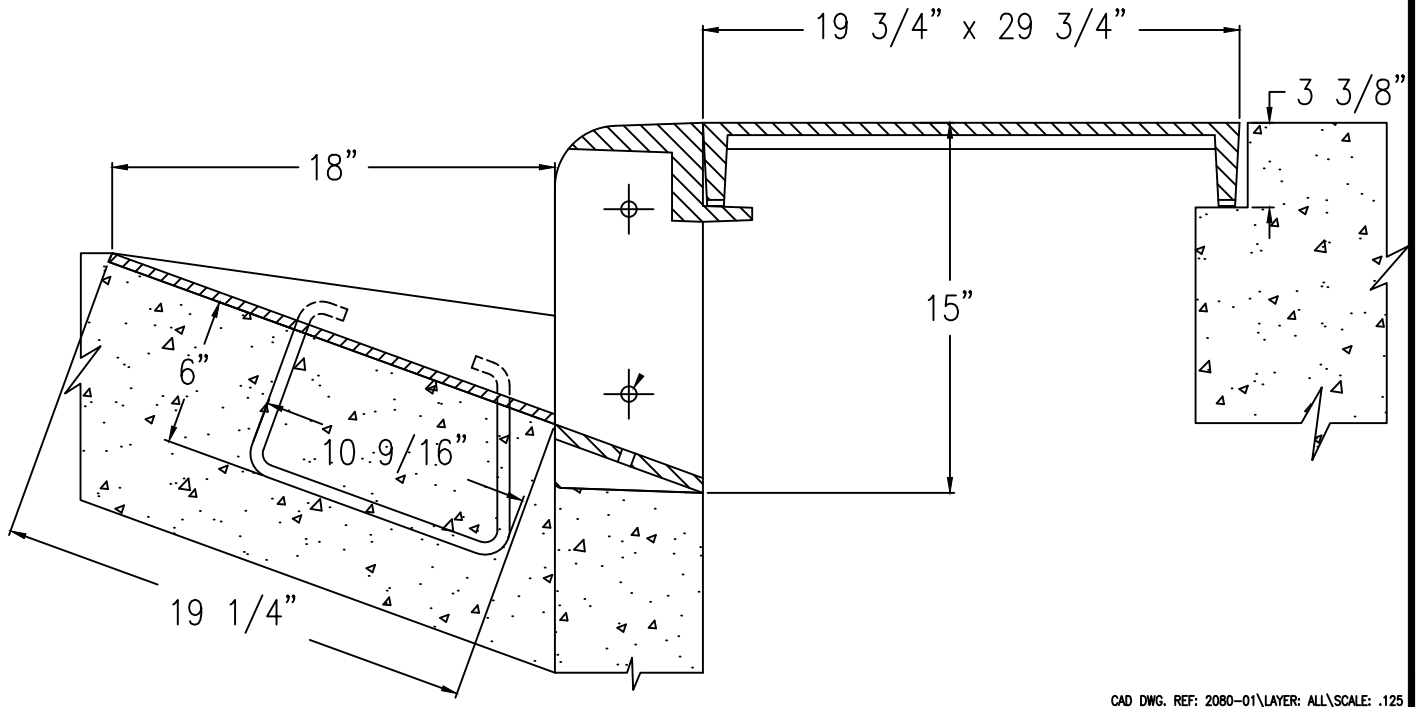

CAD DWG. REF: 2080-01\LAYER: ALL\SCALE: .125

Deeter Foundry, Inc.

5945 NORTH 70th STREET
LINCOLN, NEBRASKA 68529

2080 CURB INLET GUTTER, LID & CURB

Date: 13 OCT 94	Drawn by: RON	Scale: 1/8
DRAWING NO. 94-2080-01	Revised by: RON	Date: 30 OCT 96

MATERIAL: CAST GRAY IRON ASTM A-48, CLASS 35B

FINISH: NO PAINT

WEIGHT: 365 LBS.