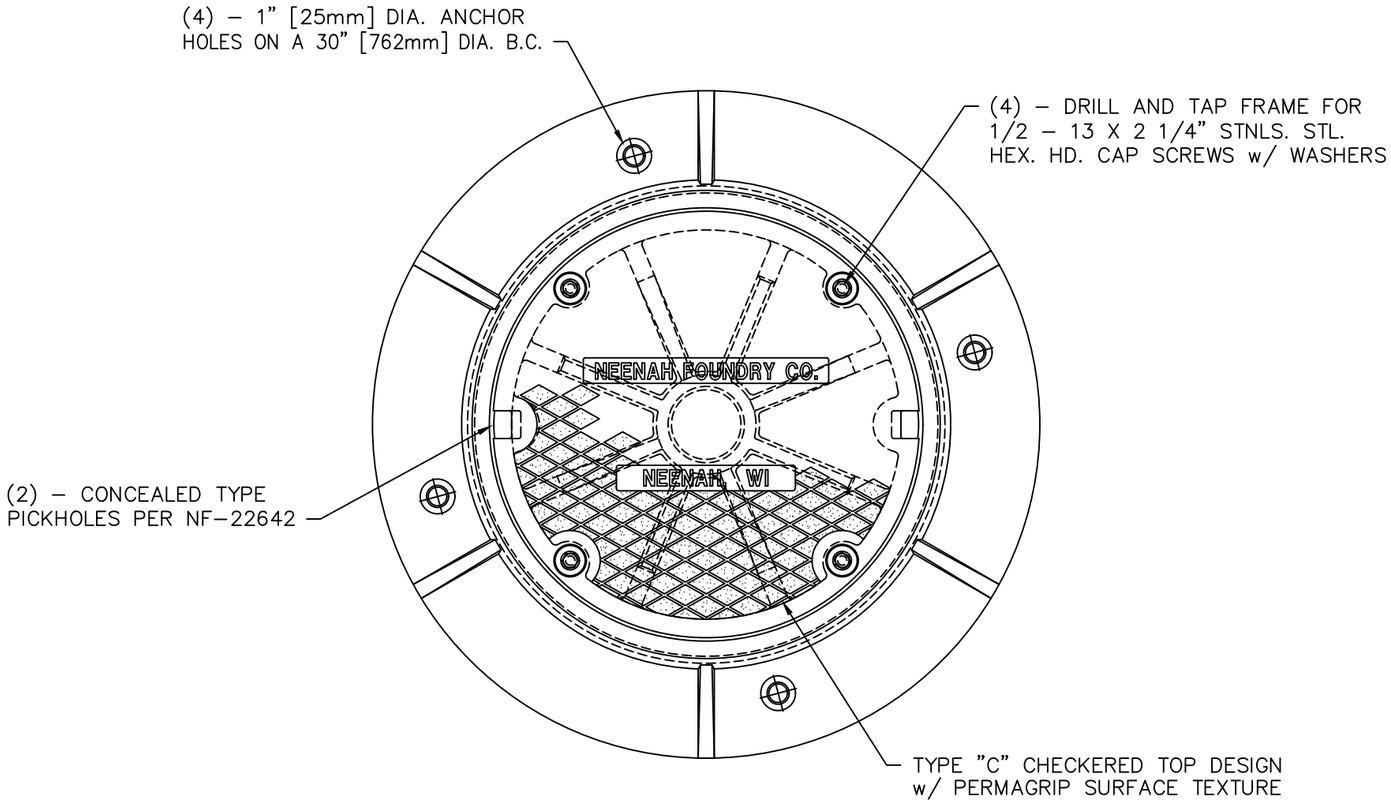

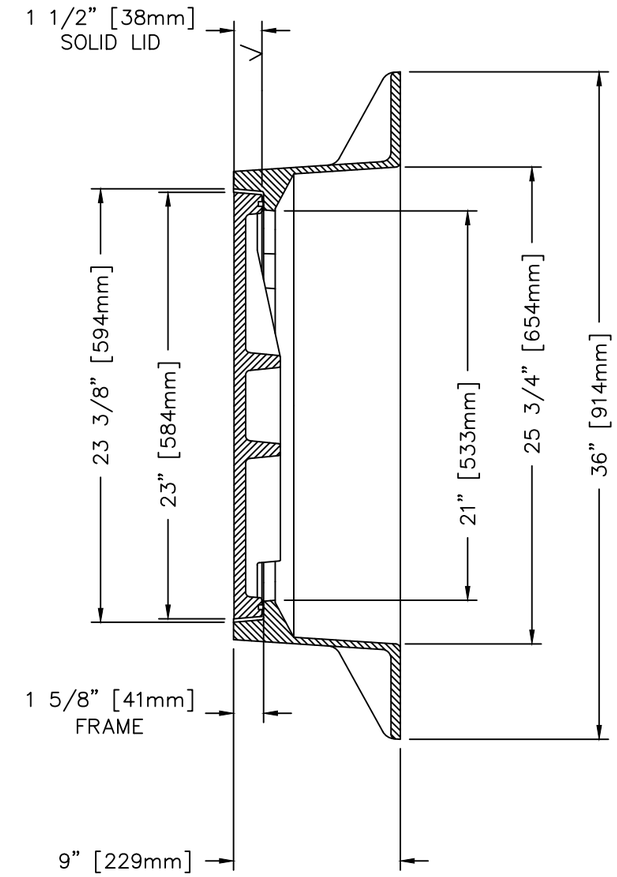

NOTE: ALL DIMENSIONS ARE SHOWN IN INCHES AND [MILLIMETERS].
CAPABLE OF H–25/HS–25 LOAD RATING.

COMPONENT NO'S: FRAME 1916–0280; LID 1916–0300

MATERIAL: CAST GRAY IRON ASTM A–48, CLASS 35B

FINISH: NOT PAINTED

WEIGHT: FRAME 207#; LID 100#

2	2–5–2018	ADDED LOAD NOTE	HSH
1	5–21–98	CORRECTED GASKET AND LID WEIGHT	ELR
	DATE	REVISION	INT

DR.	E. REMME	SCALE 1/8"=1"	TITLE: R–1916–C WATERTIGHT FRAME AND BOLTED LID
CH.			
APP.		DIM CHK.	NEENAH FOUNDRY COMPANY NEENAH WISCONSIN 54956
DATE	10–14–94		NF-1916 302 B

CAD DWG. REF: 1916 302.DWG– 3