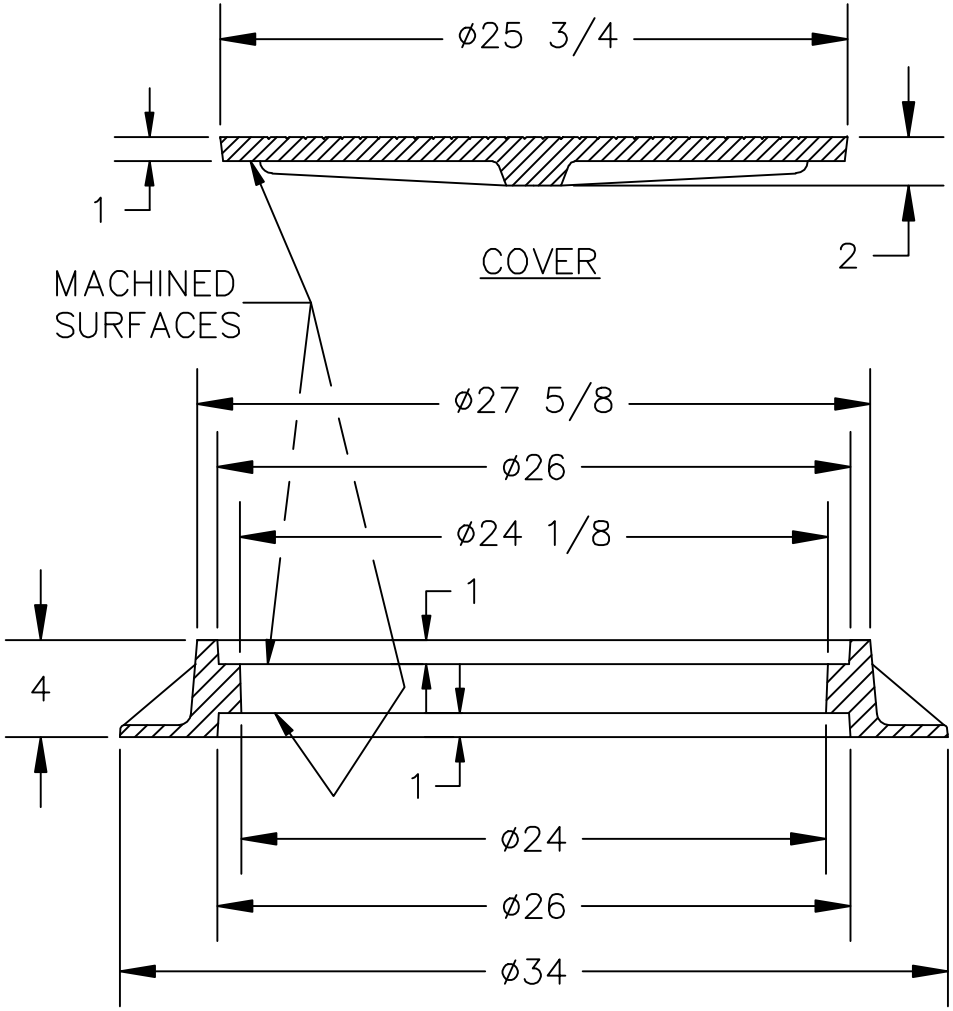


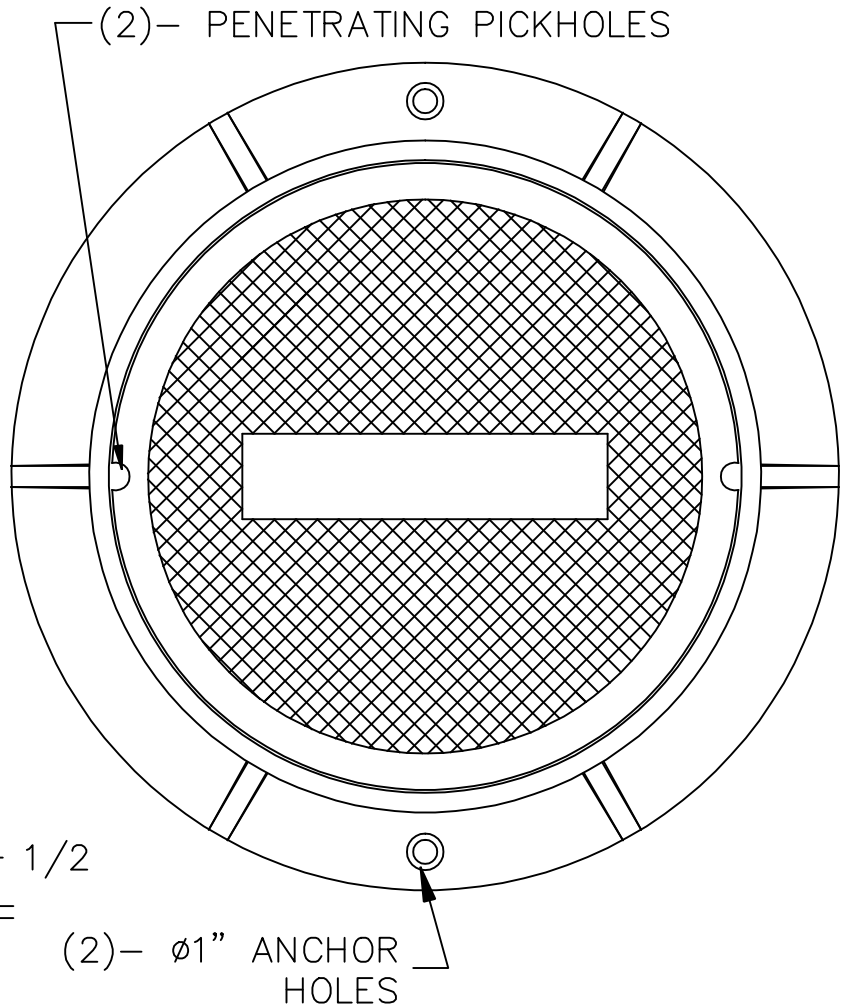


**US FOUNDRY & MFG. CORP.**
8351 NW 93rd Street, Medley, FL 33166-2025
ph: 1-800-432-9709; fax: 305-887-9429
www.usfoundry.com
© 2010 US Foundry & Mfg. Corp. All Rights Reserved

USF 153 Ring & BV Cover

| | | | | |
|---|---|---|---|---|
| LOAD CLASSIFICATION: Heavy Duty | | | | |
| MATERIAL: ASTM–A48 GRAY IRON CLASS35B | | | | |
| Ring No: | 8020044 | WGHT: | 170 | SCALE: 1/8"=1" |
| Cover No: | | | 140 | DATE: 8–13–07 |
| | | | | DWN. BY: ULS |
| UNLESS OTHERWISE NOTED WEIGHT IS IN POUNDS AND APPROXIMATED | | | | |
| REV: | DATE: | REV BY: | | QUOTE# |